Header
Report Properties
Simulation Model 1
Study 1 - Static Stress
Study Properties
Study Setup
Settings
Materials
Contacts
Mesh
Load Case1
Constraints
Loads
Guided Results
Safety Factor
Results
Result Summary
Safety Factor
Stress
Displacement

SLAM_Rescue Robot Chassis Design FEA - 2

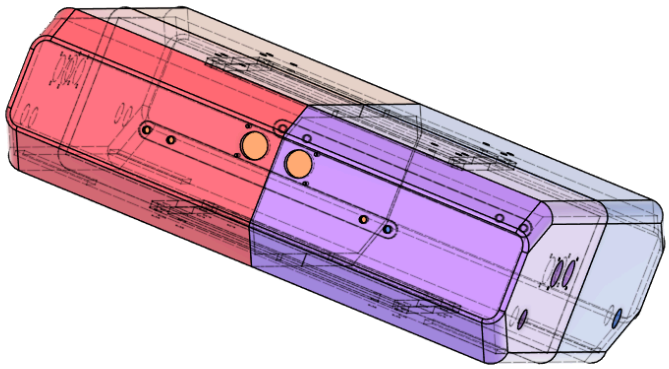

Analyzed File	ONEFOURTH v12	Version	Autodesk Fusion (2702.1.47)
Creation Date	2026-04-20, 03:14:16	Author	Hariharan Ganeshkumar

Report Properties

Report Properties	
Title	SLAM_Rescue Robot Chassis Design FEA - 2
Author	Hariharan Ganeshkumar

Simulation Model 1

Study 1 - Static Stress

Study Properties

Study Properties	
Study Type	Static Stress
Last Modification Date	2026-04-20, 03:02:49

Study Setup

Settings	
General	
Contact Tolerance	0.10 mm
Remove Rigid Body Modes	No
Mesh	
Average Element Size (% of model size) - Solids	10
Scale Mesh Size Per Part	No
Average Element Size (absolute value)	-
Element Order	Parabolic
Create Curved Mesh Elements	Yes
Max. Turn Angle on Curves (Deg.)	60
Max. Adjacent Mesh Size Ratio	1.5

Header
Report Properties
Simulation Model 1
Study 1 - Static Stress
Study Properties
Study Setup
Settings
Materials
Contacts
Mesh
Load Case1
Constraints
Loads
Guided Results
Safety Factor
Results
Result Summary
Safety Factor
Stress
Displacement

Max. Aspect Ratio	10
Minimum Element Size (% of average size)	20
Adaptive Mesh Refinement	
Number of Refinement Steps	0
Results Convergence Tolerance (%)	20
Portion of Elements to Refine (%)	10
Results for Baseline Accuracy	von Mises Stress

Materials

ABS Plastic

Components

Component	Strength
Component1:1	Yield Strength
Component1:1/Component3:1	Yield Strength
Component2:1/Body1	Yield Strength
Component2:1/Body3	Yield Strength
Component2:1/Body4	Yield Strength
Component2:1/Body5	Yield Strength
Component2:1/Component4:1	Yield Strength
center v2:1	Yield Strength
center v2:2	Yield Strength
side v1:1	Yield Strength
side v1:2	Yield Strength

Properties

Density	1.060E-06 kg / mm^3
Young's Modulus	2240.00 MPa
Poisson's Ratio	0.38
Yield Strength	20.00 MPa
Ultimate Tensile Strength	29.60 MPa
Thermal Conductivity	1.600E-04 W / (mm C)
Thermal Expansion Coefficient	8.570E-05 / C
Specific Heat	1500.00 J / (kg C)

Contacts

Contact Type	Contact Set	Penetration Type	Bodies	Entities
Bonded				
	Bonded1	Symmetric	[Body1 Component4:1||Body1 side v1:2]	[Face 29||Face 9]
	Bonded2	Symmetric	[Body1 Component4:1||Body1 side v1:2]	[Face 28||Face 5]
	Bonded3	Symmetric	[Body1 Component4:1||Body1 side v1:2]	[Face 27||Face 6]
	Bonded4	Symmetric	[Body1 Component4:1||Body1 side v1:2]	[Face 26||Face 4]
	Bonded5	Symmetric	[Body1 Component4:1||Body3 center v2:1]	[Face 24||Face 27]
	Bonded6	Symmetric	[Body1 Component4:1||Body3 center v2:1]	[Face 23||Face 9]
	Bonded7	Symmetric	[Body1 Component4:1||Body3 center v2:1]	[Face 23||Face 8]
	Bonded8	Symmetric	[Body1 Component4:1||Body3 center v2:1]	[Face 22||Face 7]
	Bonded9	Symmetric	[Body1 Component4:1||Body3 center v2:1]	[Face 22||Face 6]
	Bonded10	Symmetric	[Body1 Component4:1||Body3 center v2:1]	[Face 21||Face 22]
	Bonded11	Symmetric	[Body1 Component4:1||Body3 center v2:1]	[Face 20||Face 21]
	Bonded12	Symmetric	[Body1 Component4:1||Body3 center v2:1]	[Face 19||Face 20]

Header
Report Properties
Simulation Model 1
Study 1 - Static Stress
Study Properties
Study Setup
Settings
Materials
Contacts
Mesh
Load Case1
Constraints
Loads
Guided Results
Safety Factor
Results
Result Summary
Safety Factor
Stress
Displacement

Bonded13	Symmetric	[Body1 Component4:1]||Body3 center v2:2]	[Face 15]||Face 28]
Bonded14	Symmetric	[Body1 Component4:1]||Body3 center v2:2]	[Face 14]||Face 7]
Bonded15	Symmetric	[Body1 Component4:1]||Body3 center v2:2]	[Face 14]||Face 6]
Bonded16	Symmetric	[Body1 Component4:1]||Body3 center v2:2]	[Face 13]||Face 9]
Bonded17	Symmetric	[Body1 Component4:1]||Body3 center v2:2]	[Face 13]||Face 8]
Bonded18	Symmetric	[Body1 Component4:1]||Body3 center v2:2]	[Face 12]||Face 20]
Bonded19	Symmetric	[Body1 Component4:1]||Body3 center v2:2]	[Face 11]||Face 21]
Bonded20	Symmetric	[Body1 Component4:1]||Body3 center v2:2]	[Face 10]||Face 22]
Bonded21	Symmetric	[Body4 Component2:1]||Body1 Component4:1]	[Face 246]||Face 52]
Bonded22	Symmetric	[Body4 Component2:1]||Body1 Component4:1]	[Face 244]||Face 58]
Bonded23	Symmetric	[Body1 Component2:1]||Body1 side v1:2]	[Face 34]||Face 9]
Bonded24	Symmetric	[Body1 Component2:1]||Body1 side v1:2]	[Face 33]||Face 7]
Bonded25	Symmetric	[Body1 Component2:1]||Body1 side v1:2]	[Face 32]||Face 6]
Bonded26	Symmetric	[Body1 Component2:1]||Body1 side v1:2]	[Face 31]||Face 4]
Bonded27	Symmetric	[Body1 Component2:1]||Body3 center v2:1]	[Face 29]||Face 27]
Bonded28	Symmetric	[Body1 Component2:1]||Body3 center v2:1]	[Face 28]||Face 9]
Bonded29	Symmetric	[Body1 Component2:1]||Body3 center v2:1]	[Face 27]||Face 3]
Bonded30	Symmetric	[Body1 Component2:1]||Body3 center v2:1]	[Face 26]||Face 26]
Bonded31	Symmetric	[Body1 Component2:1]||Body3 center v2:1]	[Face 25]||Face 19]
Bonded32	Symmetric	[Body1 Component2:1]||Body3 center v2:1]	[Face 24]||Face 20]
Bonded33	Symmetric	[Body1 Component2:1]||Body1 Component4:1]	[Face 23]||Face 18]
Bonded34	Symmetric	[Body1 Component2:1]||Body3 center v2:2]	[Face 20]||Face 28]
Bonded35	Symmetric	[Body1 Component2:1]||Body3 center v2:2]	[Face 19]||Face 3]
Bonded36	Symmetric	[Body1 Component2:1]||Body3 center v2:2]	[Face 18]||Face 9]
Bonded37	Symmetric	[Body1 Component2:1]||Body3 center v2:2]	[Face 17]||Face 20]
Bonded38	Symmetric	[Body1 Component2:1]||Body3 center v2:2]	[Face 16]||Face 19]
Bonded39	Symmetric	[Body1 Component2:1]||Body3 center v2:2]	[Face 15]||Face 26]
Bonded40	Symmetric	[Body1 Component3:1]||Body5 Component2:1]	[Face 49]||Face 262]
Bonded41	Symmetric	[Body1 Component3:1]||Body5 Component2:1]	[Face 42]||Face 264]
Bonded42	Symmetric	[Body1 Component3:1]||Body1 side v1:1]	[Face 19]||Face 8]
Bonded43	Symmetric	[Body1 Component3:1]||Body1 side v1:1]	[Face 18]||Face 5]

Header
Report Properties
Simulation Model 1
Study 1 - Static Stress
Study Properties
Study Setup
Settings
Materials
Contacts
Mesh
Load Case1
Constraints
Loads
Guided Results
Safety Factor
Results
Result Summary
Safety Factor
Stress
Displacement

Bonded44	Symmetric	[Body1 Component3:1||Body1 side v1:1]	[Face 17||Face 6]
Bonded45	Symmetric	[Body1 Component3:1||Body1 side v1:1]	[Face 16||Face 4]
Bonded46	Symmetric	[Body1 Component3:1||Body3 center v2:1]	[Face 14||Face 27]
Bonded47	Symmetric	[Body1 Component3:1||Body3 center v2:1]	[Face 13||Face 5]
Bonded48	Symmetric	[Body1 Component3:1||Body3 center v2:1]	[Face 13||Face 4]
Bonded49	Symmetric	[Body1 Component3:1||Body3 center v2:1]	[Face 12||Face 6]
Bonded50	Symmetric	[Body1 Component3:1||Body3 center v2:1]	[Face 11||Face 22]
Bonded51	Symmetric	[Body1 Component3:1||Body3 center v2:1]	[Face 10||Face 23]
Bonded52	Symmetric	[Body1 Component3:1||Body3 center v2:1]	[Face 9||Face 24]
Bonded53	Symmetric	[Body1 Component3:1||Body1 Component4:1]	[Face 6||Face 16]
Bonded54	Symmetric	[Body1 Component3:1||Body3 center v2:2]	[Face 5||Face 28]
Bonded55	Symmetric	[Body1 Component3:1||Body3 center v2:2]	[Face 4||Face 6]
Bonded56	Symmetric	[Body1 Component3:1||Body3 center v2:2]	[Face 3||Face 5]
Bonded57	Symmetric	[Body1 Component3:1||Body3 center v2:2]	[Face 3||Face 4]
Bonded58	Symmetric	[Body1 Component3:1||Body3 center v2:2]	[Face 2||Face 24]
Bonded59	Symmetric	[Body1 Component3:1||Body3 center v2:2]	[Face 1||Face 23]
Bonded60	Symmetric	[Body1 Component3:1||Body3 center v2:2]	[Face 0||Face 22]
Bonded61	Symmetric	[Body1 Component1:1||Body3 Component2:1]	[Face 49||Face 224]
Bonded62	Symmetric	[Body1 Component1:1||Body3 Component2:1]	[Face 42||Face 228]
Bonded63	Symmetric	[Body1 Component1:1||Body1 side v1:1]	[Face 19||Face 8]
Bonded64	Symmetric	[Body1 Component1:1||Body1 side v1:1]	[Face 18||Face 7]
Bonded65	Symmetric	[Body1 Component1:1||Body1 side v1:1]	[Face 17||Face 6]
Bonded66	Symmetric	[Body1 Component1:1||Body1 side v1:1]	[Face 16||Face 4]
Bonded67	Symmetric	[Body1 Component1:1||Body3 center v2:1]	[Face 14||Face 27]
Bonded68	Symmetric	[Body1 Component1:1||Body3 center v2:1]	[Face 13||Face 4]
Bonded69	Symmetric	[Body1 Component1:1||Body3 center v2:1]	[Face 12||Face 3]
Bonded70	Symmetric	[Body1 Component1:1||Body3 center v2:1]	[Face 11||Face 26]
Bonded71	Symmetric	[Body1 Component1:1||Body3 center v2:1]	[Face 10||Face 25]
Bonded72	Symmetric	[Body1 Component1:1||Body3 center v2:1]	[Face 9||Face 24]
Bonded73	Symmetric	[Body1 Component1:1||Body1 Component3:1]	[Face 8||Face 8]
Bonded74	Symmetric	[Body1 Component1:1||Body1 Component2:1]	[Face 6||Face 21]

Header
Report Properties
Simulation Model 1
Study 1 - Static Stress
Study Properties
Study Setup
Settings
Materials
Contacts
Mesh
Load Case1
Constraints
Loads
Guided Results
Safety Factor
Results
Result Summary
Safety Factor
Stress
Displacement

	Bonded75	Symmetric	[Body1 Component1:1||Body3 center v2:2]	[Face 5||Face 28]
	Bonded76	Symmetric	[Body1 Component1:1||Body3 center v2:2]	[Face 4||Face 3]
	Bonded77	Symmetric	[Body1 Component1:1||Body3 center v2:2]	[Face 3||Face 4]
	Bonded78	Symmetric	[Body1 Component1:1||Body3 center v2:2]	[Face 2||Face 24]
	Bonded79	Symmetric	[Body1 Component1:1||Body3 center v2:2]	[Face 1||Face 25]
	Bonded80	Symmetric	[Body1 Component1:1||Body3 center v2:2]	[Face 0||Face 26]

Mesh	
Type	Solids
Nodes	46520
Elements	23247

Load Case1

Constraints

Fixed1

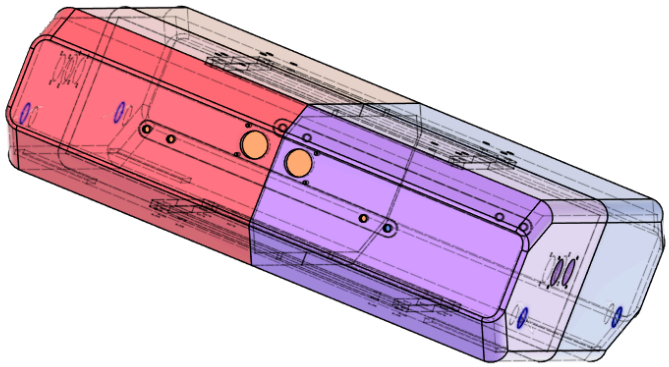

Type	Fixed
Ux	Fixed
Uy	Fixed
Uz	Fixed

Loads

Force2

Header
Report Properties
Simulation Model 1
Study 1 - Static Stress
Study Properties
Study Setup
Settings
Materials
Contacts
Mesh
Load Case1
Constraints
Loads
Guided Results
Safety Factor
Results
Result Summary
Safety Factor
Stress
Displacement

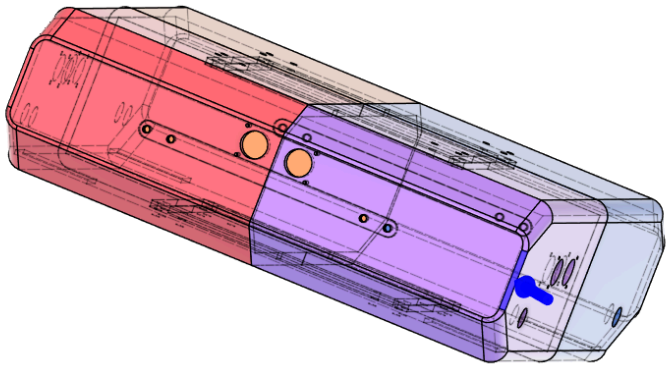

Type	Force
Magnitude	30.00 N
X Value	-21.213 N
Y Value	0.00 N
Z Value	-21.213 N
X Angle	0.0 deg
Y Angle	0.0 deg
Z Angle	0.0 deg
Force Per Entity	No

Load Case1 - Guided Results

Safety Factor

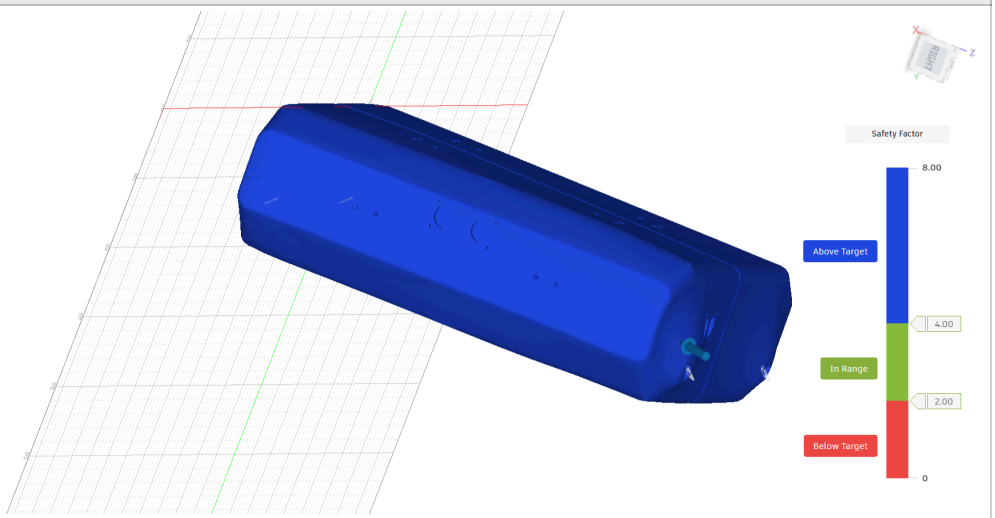

With the analysis criteria in this study setup, the design is expected to bend permanently or break.

Next Steps

Below Safety Factor Target

Validate your study setup

- Check the loads are not set too high
- Check the mesh refinement and consider increasing it in areas of high stress
- Confirm your Safety Factor requirement
- If the Displacement result shows high displacement, consider running a Nonlinear study to gain more insight

Check other results

- Examine the Below target Result visualization to see where the weakest areas are
- Check the stress result to see if, and where, the material might yield
- Check the displacement result to see how far from its original alignment the model has moved
- Look at other results, such as reaction forces to check your study set up, or strain to check your material performance

Header
Report Properties
Simulation Model 1
Study 1 - Static Stress
Study Properties
Study Setup
Settings
Materials
Contacts
Mesh
Load Case1
Constraints
Loads
Guided Results
Safety Factor
Results
Result Summary
Safety Factor
Stress
Displacement

	Strengthen weak areas • Add more material to weak areas • Select a material with a higher yield strength • Stiffen the design • Modify the shape with a Generative Design study
	Generate alternative designs • Add more material to weak areas • Select a material with a higher yield strength • Stiffen the design • Modify the shape with a Generative Design study
	Above Safety Factor Limit
	Validate your study setup • Check the loads are not set too high • Check the mesh refinement and consider increasing it in areas of high stress • Confirm your Safety Factor requirement • If the Displacement result shows high displacement, consider running a Nonlinear study to gain more insight
	Check other results • Examine the Below target Result visualization to see where the weakest areas are • Check the stress result to see if, and where, the material might yield • Check the displacement result to see how far from its original alignment the model has moved • Look at other results, such as reaction forces to check your study set up, or strain to check your material performance
	Lightweight the design • Set a Safety Factor upper limit to find where material can be removed • Remove material from areas that exceed the Safety Factor upper limit
	Generate alternative designs • In the Generative Design workspace, create design modifications • Remove unnecessary material using a Shape Optimization study

Load Case1 - Results

Result Summary			
Result type	Sub-result	Minimum	Maximum
Safety Factor			
	Safety Factor	54.217	125,562.602
Stress			
	Von Mises	1.593E-04 MPa	0.369 MPa
	1st Principal	-0.176 MPa	0.638 MPa
	3rd Principal	-0.446 MPa	0.254 MPa
	Normal XX	-0.319 MPa	0.317 MPa
	Normal YY	-0.318 MPa	0.377 MPa
	Normal ZZ	-0.361 MPa	0.515 MPa
	Shear XY	-0.078 MPa	0.103 MPa
	Shear YZ	-0.179 MPa	0.121 MPa
	Shear XZ	-0.113 MPa	0.14 MPa
Displacement			
	Total	0 mm	0.009 mm
	X	-0.003 mm	3.023E-04 mm
	Y	-0.002 mm	0.002 mm
	Z	-0.008 mm	2.158E-04 mm
Reaction Force			
	Total	0 N	2.474 N
	X	-0.809 N	1.663 N
	Y	-1.237 N	1.477 N
	Z	-0.763 N	1.749 N
Strain			
	Equivalent	1.127E-07	2.719E-04
	1st Principal	9.66E-08	2.946E-04
	3rd Principal	-2.443E-04	-7.90E-08

Header
Report Properties
Simulation Model 1
Study 1 - Static Stress
Study Properties
Study Setup
Settings
Materials
Contacts
Mesh
Load Case1
Constraints
Loads
Guided Results
Safety Factor
Results
Result Summary
Safety Factor
Stress
Displacement

	Normal XX	-1.135E-04	8.082E-05
	Normal YY	-1.161E-04	9.738E-05
	Normal ZZ	-7.832E-05	1.124E-04
	Shear XY	-9.569E-05	1.265E-04
	Shear YZ	-2.203E-04	1.492E-04
	Shear XZ	-1.393E-04	1.719E-04
Contact Pressure			
	Total	0 MPa	0.546 MPa
	X	-0.03 MPa	0.034 MPa
	Y	-0.179 MPa	0.125 MPa
	Z	-0.101 MPa	0.515 MPa
Contact Force			
	Total	0 N	6.265 N
	X	-0.647 N	0.542 N
	Y	-3.621 N	4.358 N
	Z	-4.50 N	3.116 N

Safety Factor

Safety Factor

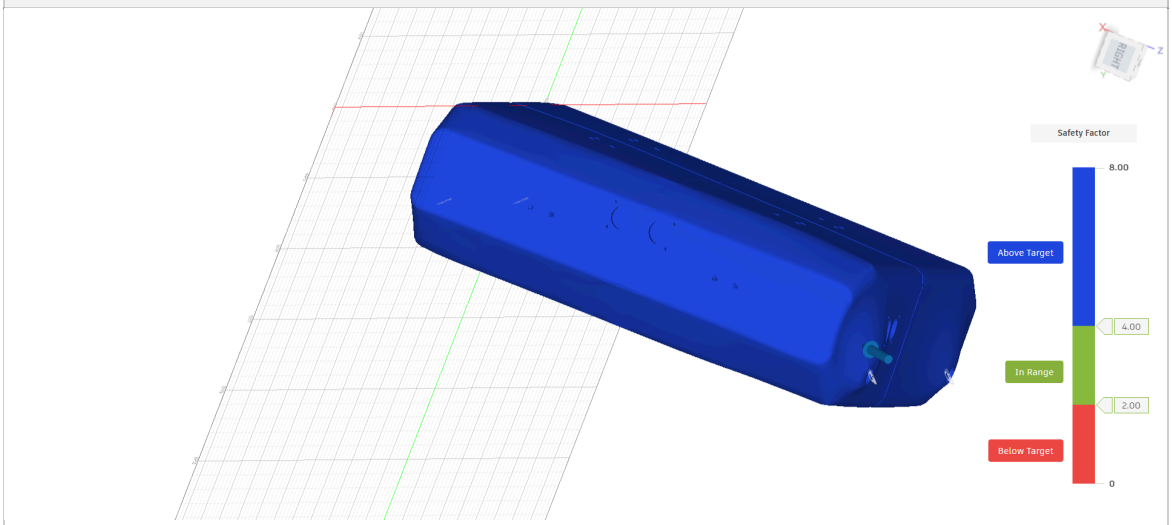

Stress

Von Mises

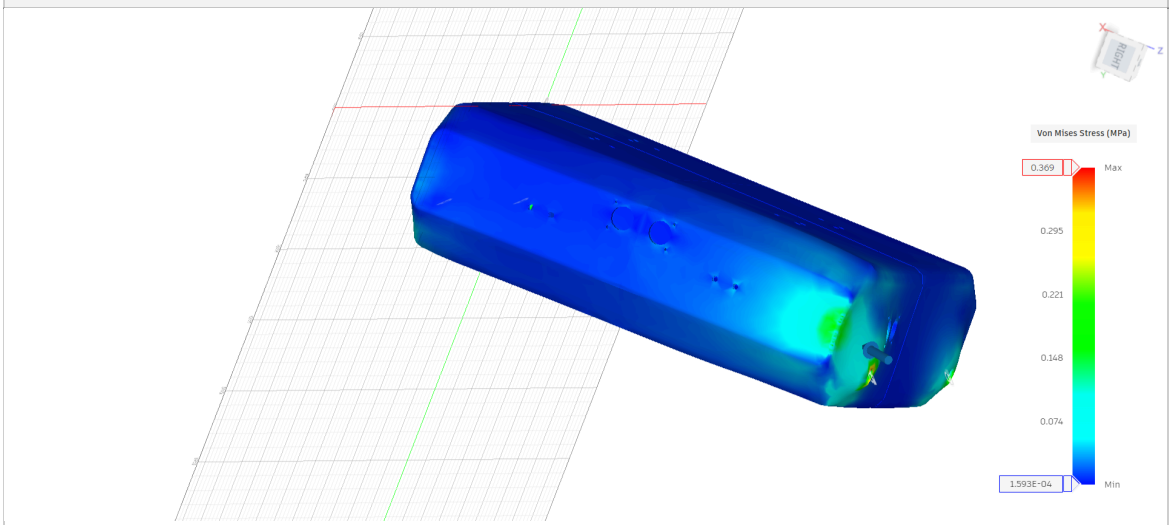

1st Principal

Header
Report Properties
Simulation Model 1
Study 1 - Static Stress
Study Properties
Study Setup
Settings
Materials
Contacts
Mesh
Load Case1
Constraints
Loads
Guided Results
Safety Factor
Results
Result Summary
Safety Factor
Stress
Displacement

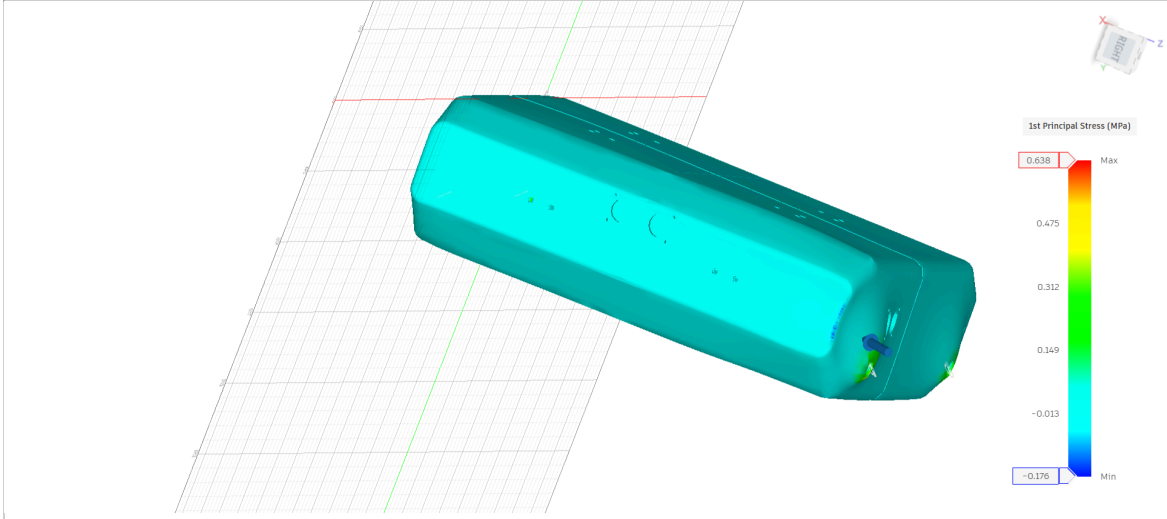

3rd Principal

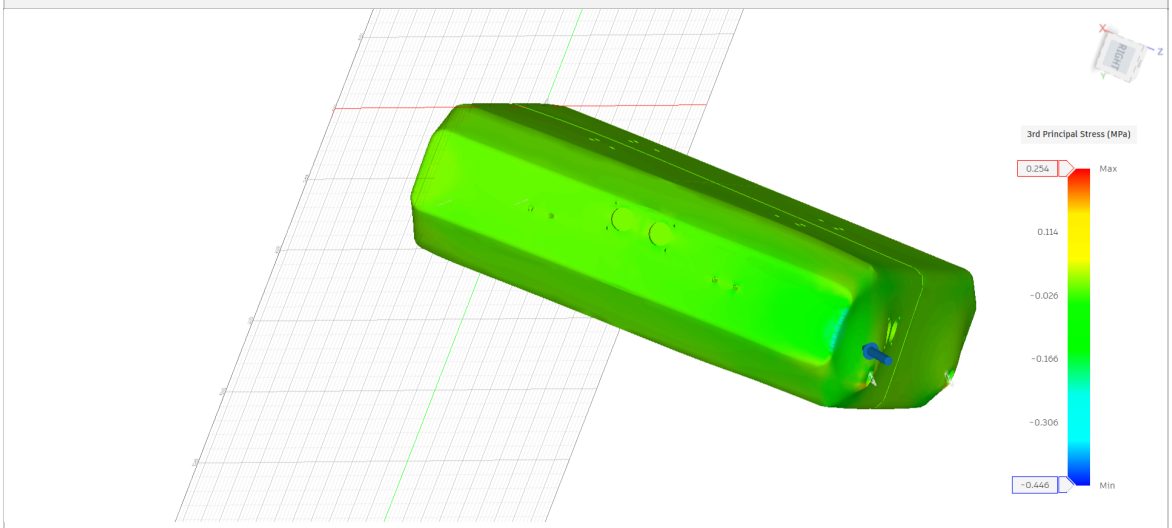

Displacement
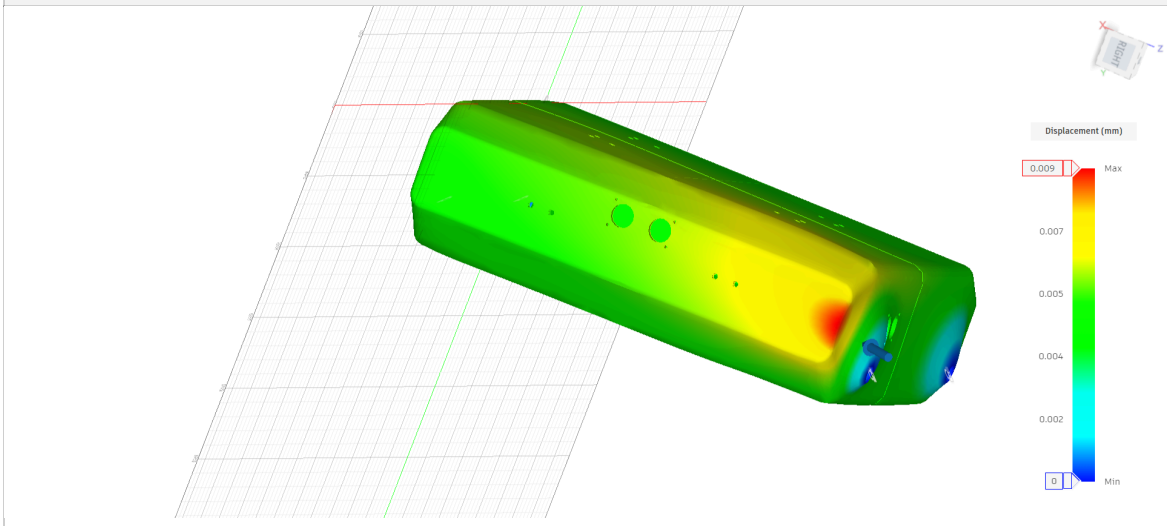
Total